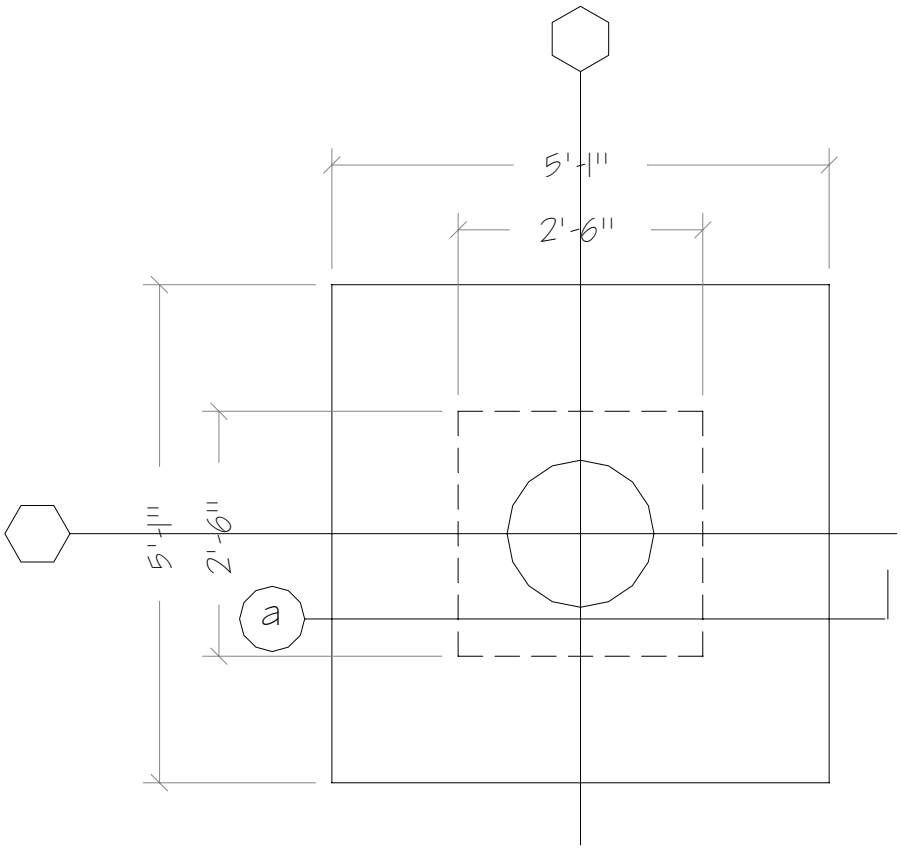

PLAN VIEW

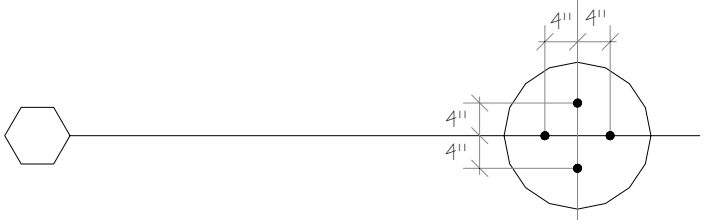

ANCHOR BOLT LAYOUT

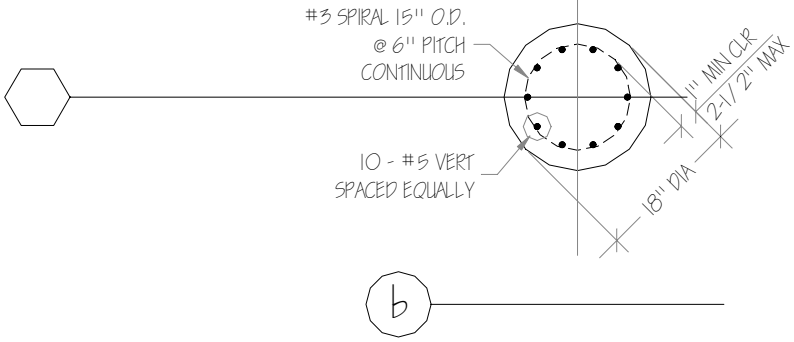

Nel's dwg #1b

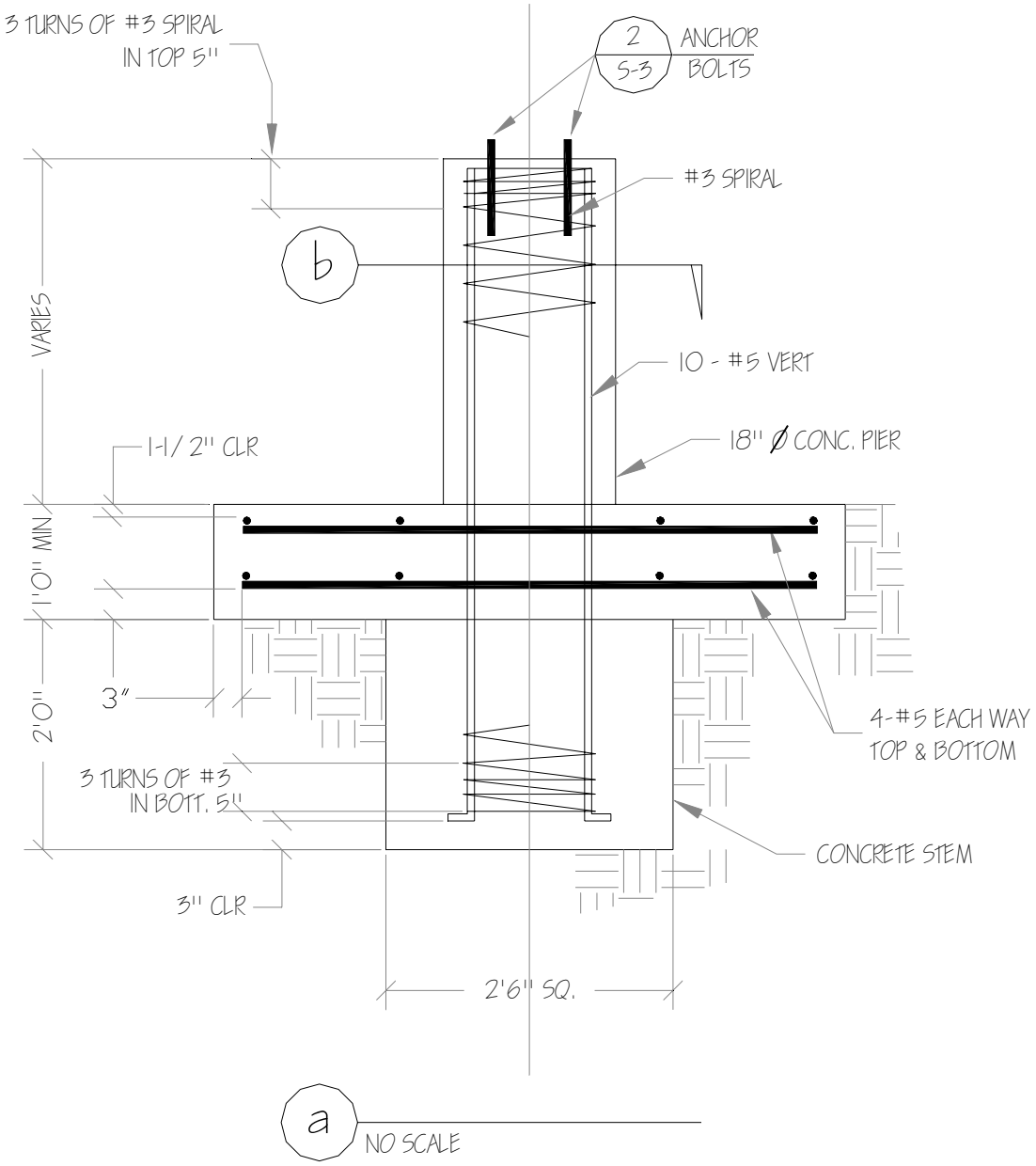
3 TURNS OF #3 SPIRAL
IN TOP 5"
2
5-3
ANCHOR
BOLTS
#3 SPIRAL
b
VARIES
10 - #5 VERT
18" Ø CONC. PIER
1-1/2" CLR
1'0" MIN
2'0"
3"
4-#5 EACH WAY
TOP & BOTTOM
3 TURNS OF #3
IN BOTT. 5"
CONCRETE STEM
3" CLR
2'6" SQ.
a
NO SCALE

Nel's dwg #1a

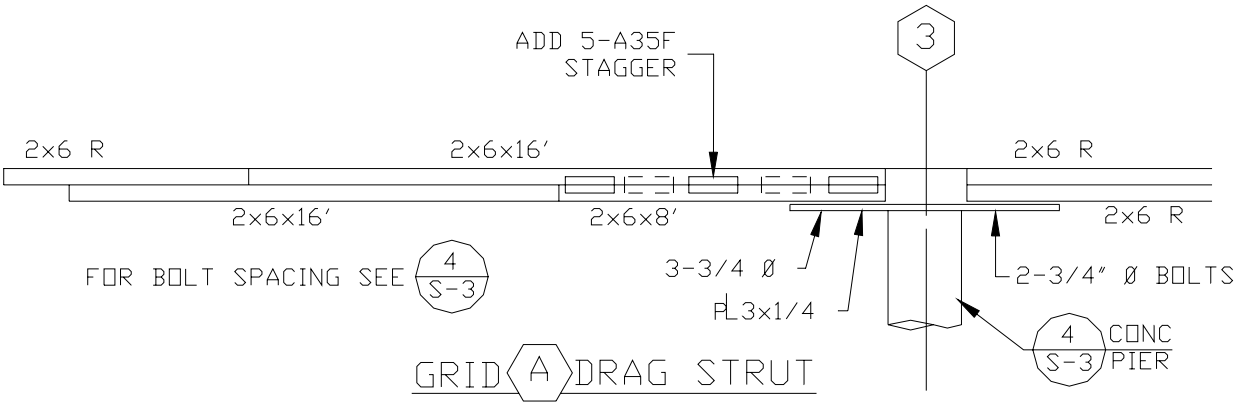

GRID A DRAG STRUT

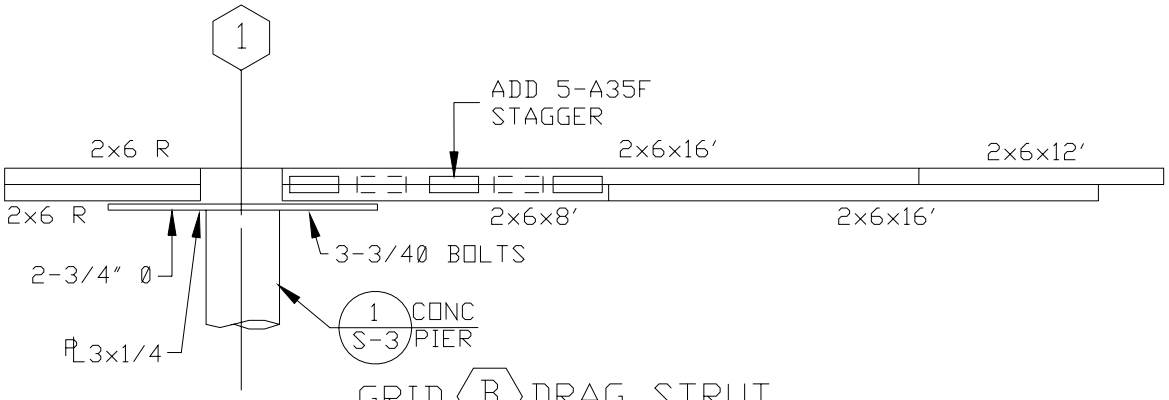

GRID B DRAG STRUT

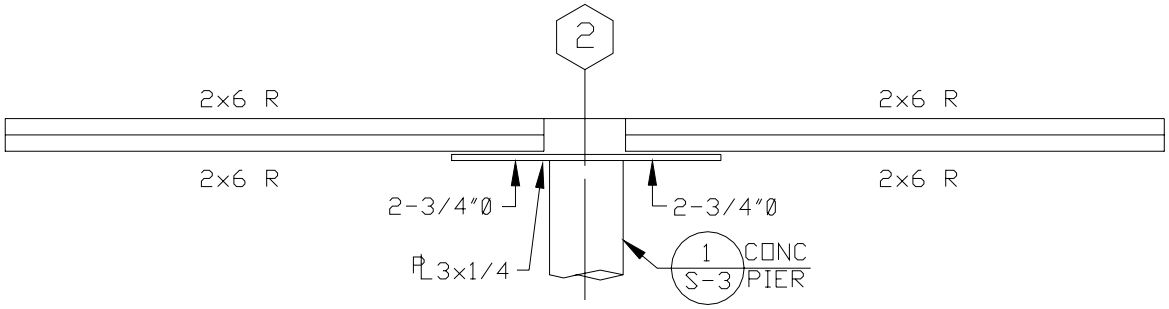

GRID C DRAG STRUT

LEGEND

2x6x8'
- LENGTH FEET
- MEMBER SIZE

R = REMAINING LENGTH

2-3/40 = NUMBER AND DIA. OF BOLTS THRU PL & 2-2x6

6/S-3 NORTH-SOUTH DRAG STRUT SPLICES LOOKING EAST
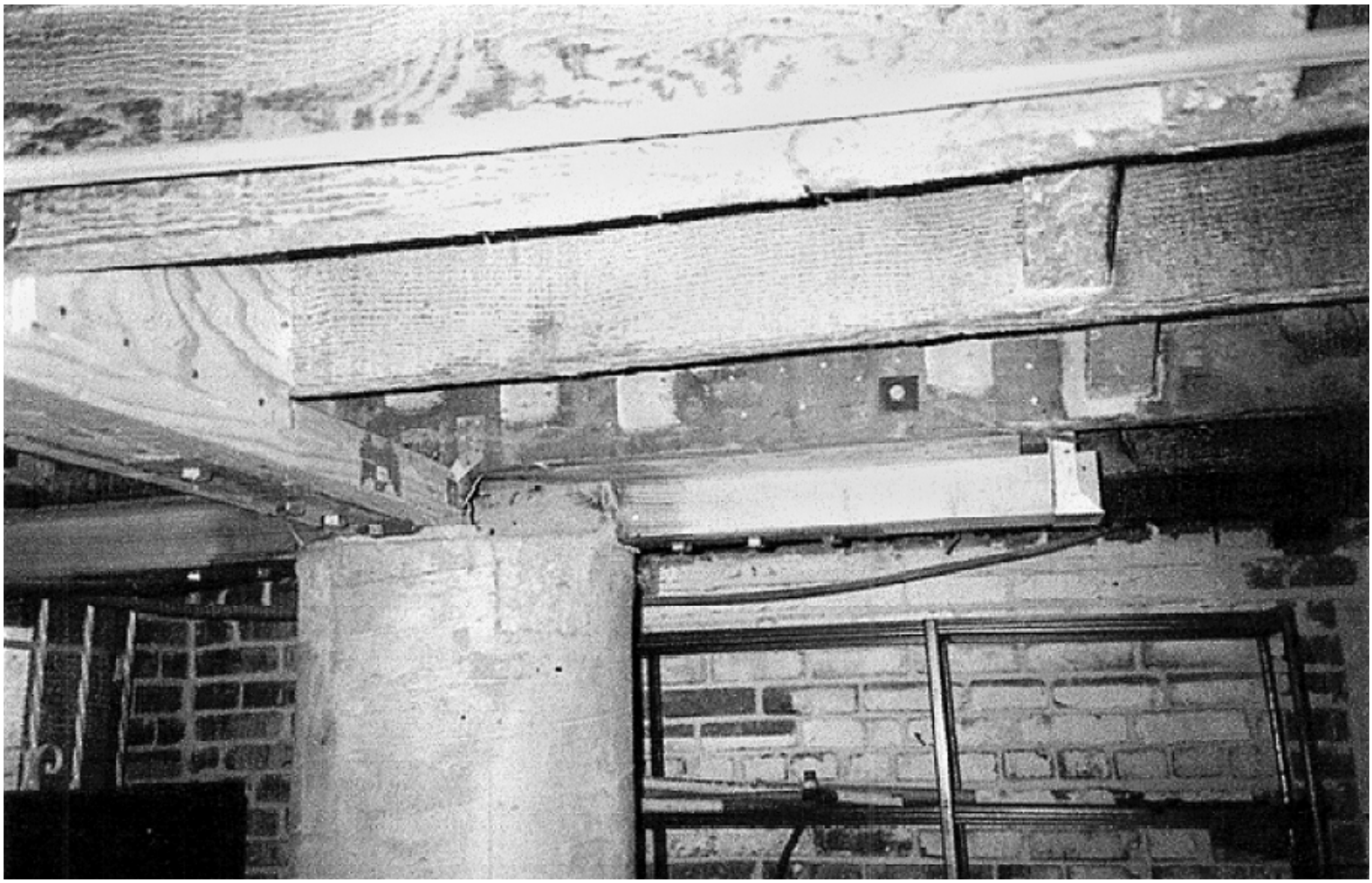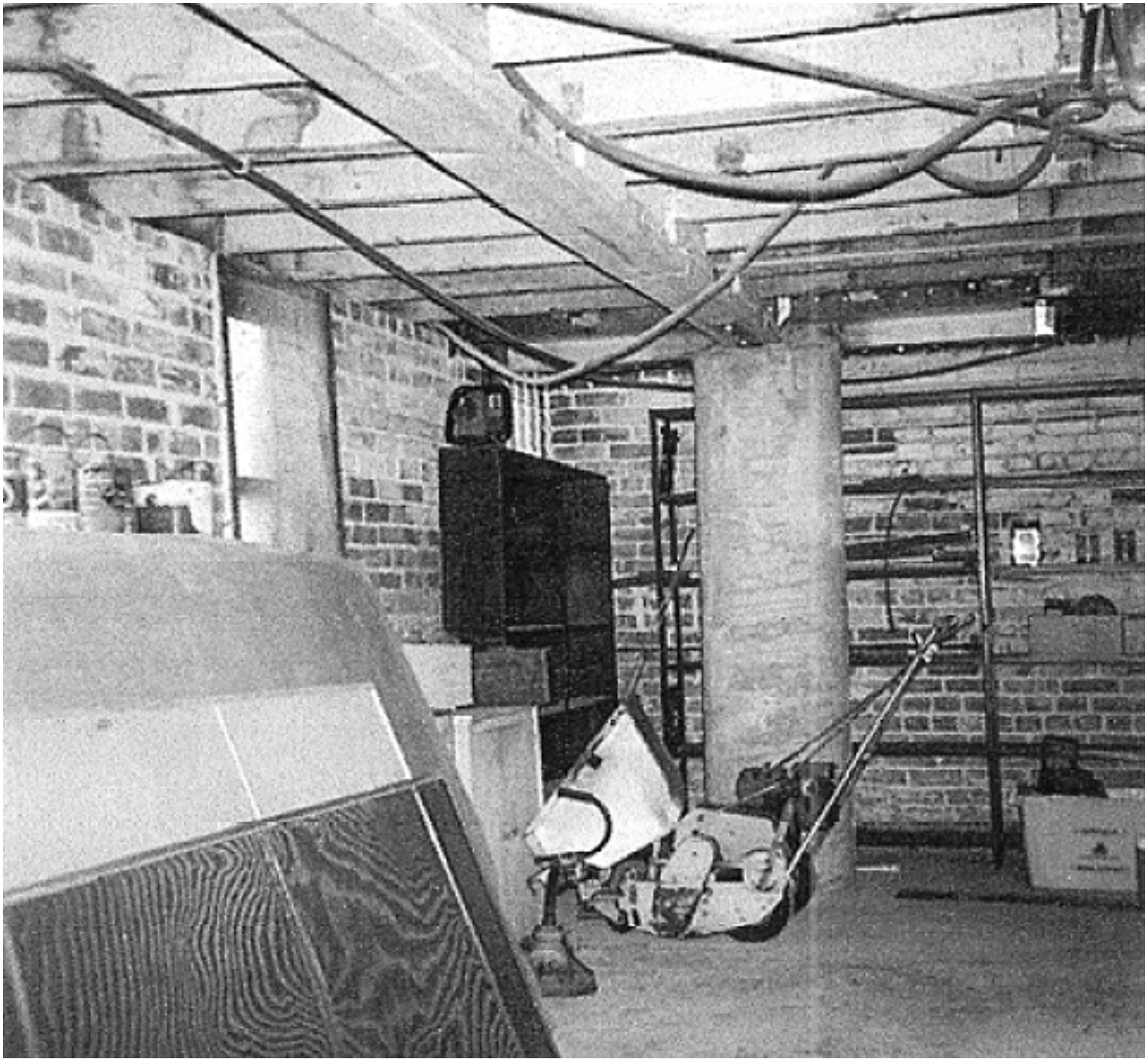
Nel's dwg #2